ASSEMBLY INSTRUCION ANCHOR SYSTEM

MODULAR RIGS

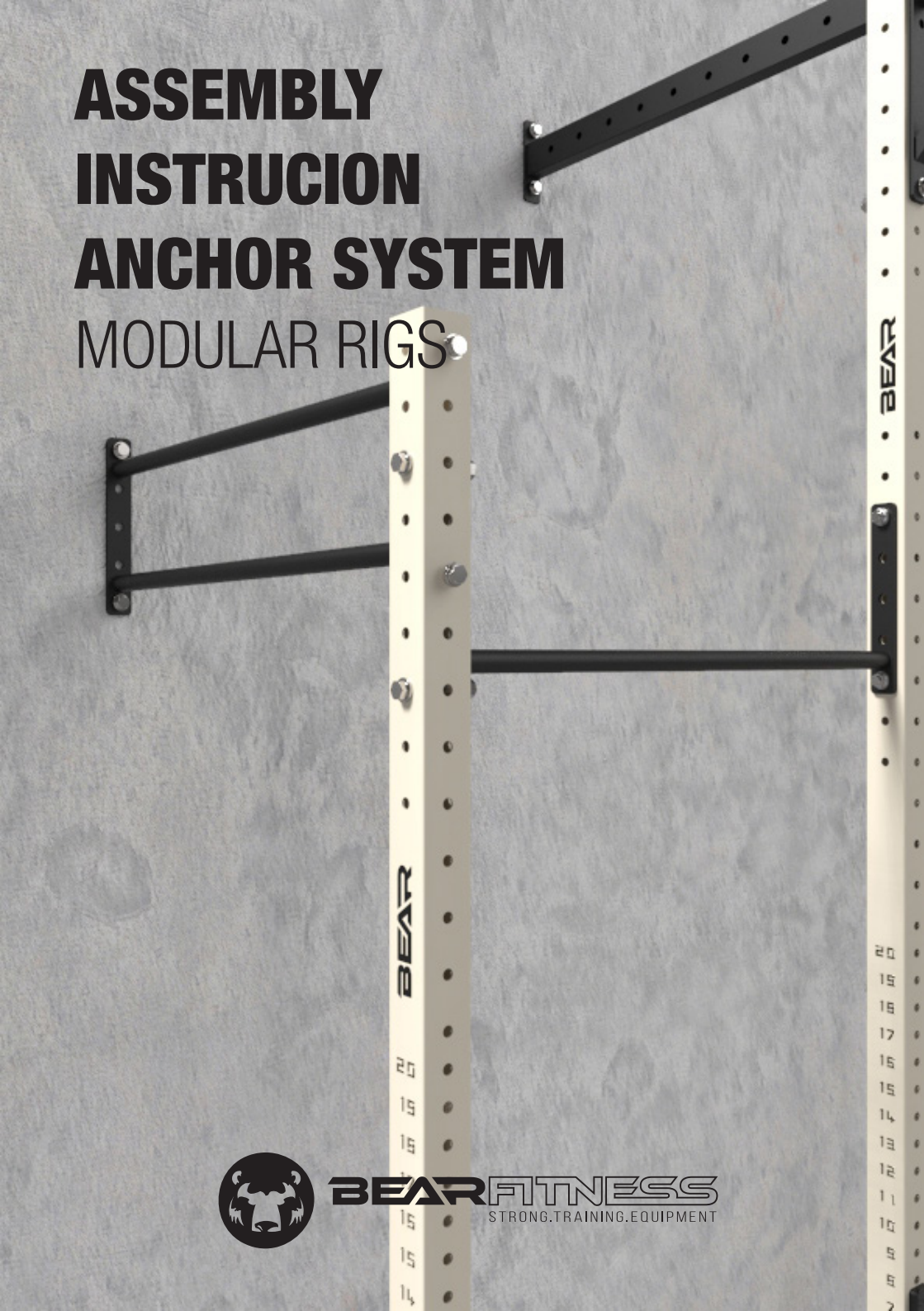

BEARFITNESS
STRONG.TRAINING.EQUIPMENT

WARNING!

SECURITY FIRST! You're about to lift heavy loads, drill holes and other risky things, be sure to wear individual protection devices: gloves, glasses/mask. Our modular rigs need to be assembled by teams of three or more workers.

- TOOLS NEEDED

To ensure proper assembly, make sure you have quality tools.
Ask for professional help, If necessary.

wrench

drill

ladder

tape measure

level

screwdriver

NB: Before application, check the actual consistency of the floor and/or wall where the installation will be carried out.

- FLOOR/REINFORCED CONCRETE WALL ANCHORAGE

Two methods can be used to fix columns or bars to the wall on reinforced concrete:

1- METAL EXPANSION PLUG Ø 16 L STANDARD

2- TWO-COMPONENT RESIN ANCHORAGE

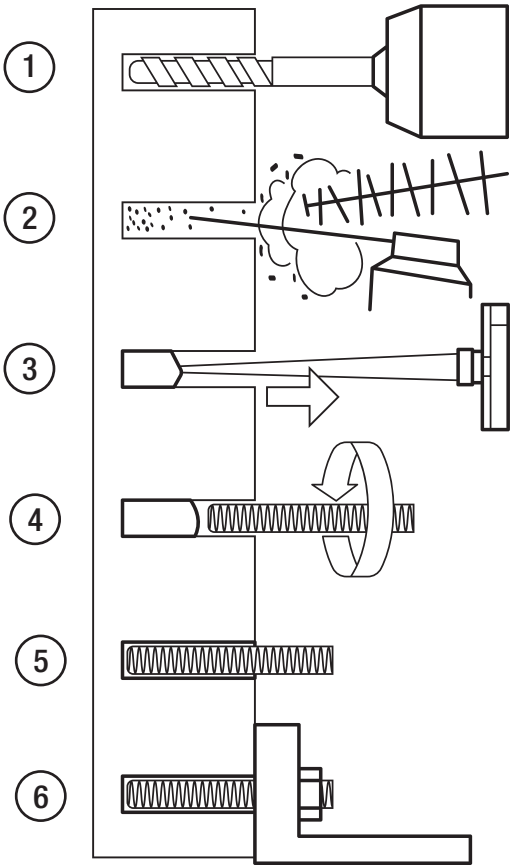

NB: The material for mounting both metal dowels and two-component resin can be purchased from a technical hardware store or can be requested from our company.

-PERFORATED BRICKS WITH TWO-COMPONENT RESIN ANCORAGE

CHEMICAL ANCHOR STUD M.10 x

CHEMICAL ANCHOR SLEEVE Ø16

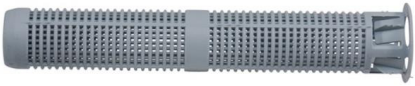

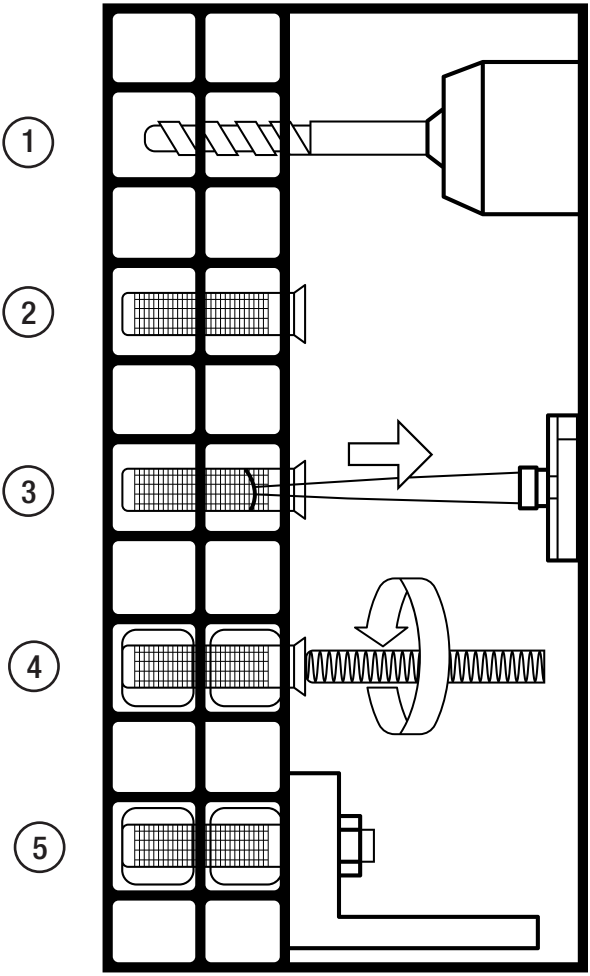

NB: Before application, check the actual consistency of the floor and/or wall where the installation will be carried out.

BEAR FITNESS

STRONG.TRAINING.EQUIPMENT